PLEASE READ INSTRUCTIONS PRIOR TO INSTALLATION

EB•TY®

Hidden Deck-Fastening Systems™

Installation Instructions

Installing the First Board

- Apply a bead of exterior construction adhesive to each joist—about 3/8" wide.
- Fasten one side of the first deck board using screws and plugs. Use a 1/8" drill bit with a 3/8" countersink. Drive in a #7 X 2-1/4" stainless trim-head screw at each joist of the first deck board.
- Glue and insert 3/8" Ipe' Tapered Wood Plugs **(Part Code: IPLUG01)** into each countersunk hole. Remove any part of the wood plug that protrudes, using a saw or belt sander.
- If using pre-grooved decking please disregard the next two bullets (Turn page over for pre-groove decking details.)
- Cut a slot in deck board at each joist and deck board intersection using a 1/8" router bit or plate joiner (biscuit cutter #20).
- Adjust router or plate joiner (biscuit cutter) height so that the bottom edge of the fastener is flush with the bottom of the deck board. If using pre-grooved decking, no slot is necessary.
- Place fasteners in the slots at each joist. Install one #7 X 2-1/4" stainless trim-head screw in each fastener at a 45-degree angle. Tighten snugly to the EB-TY fasteners.
- Drill an angled 1/8" pilot hole for each screw when installing hardwood decking.

Installing Additional Deck Boards

- Apply a bead of exterior construction adhesive to each joist, approximately 3/8" wide.
- Cut a slot at each intersection with joist on each side of the next board.
- Place the board so the slot slips over the exposed fasteners. Use a BoWrench® or a clamp to straighten boards, if necessary.
- Place EB-TY fasteners in the slot at each joist. Install one #7 X 2-1/4" stainless trim-head screw in each fastener at a 45-degree angle. Tighten snugly to the EB-TY fasteners.
- Repeat above process until all decking is fastened, with the exception of the final outside board. Install the final outside board by cutting slots only on the inside of the final board.

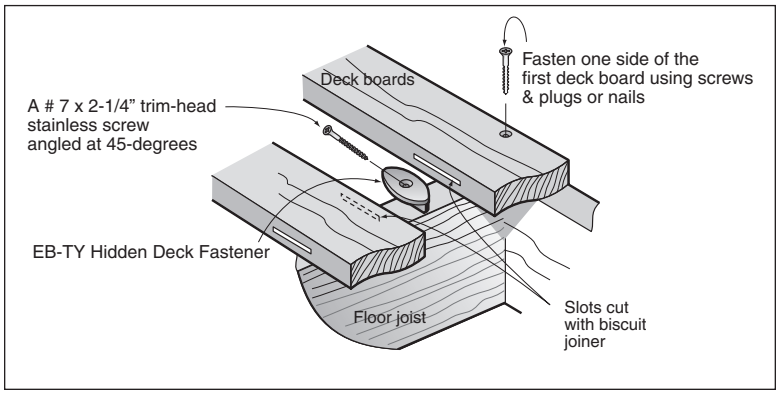

ATTENTION BUILDER

Please review the decking material installation instructions provided by the lumber supplier and/or manufacturer prior to installing the EB-TY fasteners. The fasteners are designed to accommodate special board spacing and board thickness. Allow moisture in the deck board to reach the ambient moisture level of the surroundings prior to installation. Adequate airflow and proper ventilation beneath your decking is important to the long-term stability of your decking.

Please turn page over for Helpful Hints and other useful information

Hidden Deck-Fastening Systems™

Helpful Hints
The following hints may not necessarily pertain to your individual building project. If you require more specific information, please contact your building-material supplier, contractor, architect or EB-TY.

- Drill an angled pilot hole when installing hardwood decking to avoid splintering and ensure the decking is pulled tight to the joist.
- Use construction adhesive. It not only provides additional holding power but also acts as an insulator, helping eliminate squeaking after your deck boards have settled.
- Use a urethane dead-blow hammer, a clamp or a BoWrench® to help maintain a uniform, even joint.
- Use a conventional "biscuit" to help align the butt ends of two decking boards of uneven thickness.
- Tighten screws so the screw head is slightly recessed or flush with fastener. Do not over tighten.
- Lay decking material on the deck joists long enough to allow the decking material to acclimate to the site conditions and minimize shrinkage. Use an alternate fastener if shrinkage exceeds 1/2" width.

Whether you choose natural wood, such as Ipe', or man-made composites we have the perfect EB-TY® Hidden Deck-Fastening System™ for you.

Bring the schematic below to your lumber yard. They will use it to pre-groove your decking material to accept EB-TY® fasteners.

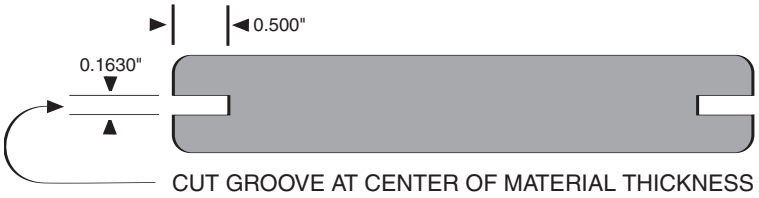

Fasteners/Square Foot Chart
Count the number of joists and multiply by the number of deck boards. To determine the number of deck boards, divide deck width in inches by the width of the boards (3.5", 5.5", etc).

Dimensions	Number of EB-TY Hidden Deck Fasteners™ needed per square foot
3.5" boards w / 16" on center joists	2.75
5.5" boards w / 16" on center joists	1.75
3.5" boards w / 24" on center joists	2.00
5.5" boards w / 24" on center joists	1.00

EB-TY® Big Hidden Deck Fasteners™ (Part Code: EBE002)

This larger version of the original fastener works well with thicker boards, such as 2"x4" and 2"x6", decking material making it ideal for heavy-duty applications including docks, boardwalks, etc. Can be custom-made in any color. Automatically provides 1/4" spacing between deck boards.

Fastener Dimensions:

Height: 5/8"
Width: 1-9/32"
Length: 2-9/32"
Thickness: .140"
Keel thickness: 1/4"

EB-TY® Original Hidden Deck Fasteners™ (Part Code: EBE004)
For use with 3/4" and 5/4" deck boards, including Ipe', redwood, cedar, CorrectDeck® Classic, composites, etc. Can be custom-made in any color. Automatically provides 3/32" spacing between deck boards.

Fastener Dimensions:

Height: 1/2"
Width: 1"
Length: 2-3/8"
Thickness: .140"
Keel thickness: 3/32"

EB-TY® L.C. "Live Cylinder™" 1/4" Hidden Deck Fasteners™ (Part Code: EBE005LC)
Designed for use with kiln-dried decking, composites and natural woods that expand as moisture level increases with temperature increases. The L.C. fastener can absorb as much as 5/32" expansion of the deck material. Can be custom-made in any color.

Fastener Dimensions:

Height: 1/2"
Width: 1"
Length: 2-3/8"
Thickness: .140"
Keel thickness: 1/4"

EB-TY® L.C. Jr. "Live Cylinder™" 1/4"Hidden Deck Fasteners™ (Part Code: EBE006LC)
The L.C. Jr. fastener has a lower profile height than the EB-TY L.C. and is for use with 11/16" and 3/4" thick decking material. The L.C. Jr. provides the same expansion-absorbing capability as does the EB-TY L.C. fastener: It can absorb as much as 5/32" expansion of the deck material. Can be custom-made in any color. Automatically provides 1/4" spacing between deck boards.

Fastener Dimensions:

Height: 13/32"
Width: 1"
Length: 2-3/8"
Thickness: .140"
Keel thickness: 1/4"

EB-TY® Mini Jr. Hidden Deck Fasteners™ (Part Code: EBE007JR)
The EB-TY Mini Jr. fastener has a lower profile height than EB-TY Original Hidden Deck Fasteners and is for use with 11/16" and 3/4" thick decking material.

Automatically provides 3/32" spacing between deck boards.

Fastener Dimensions:

Height: 13/32"
Width: 1"
Length: 2-3/8"
Thickness: .140"
Keel Thickness: 3/32"